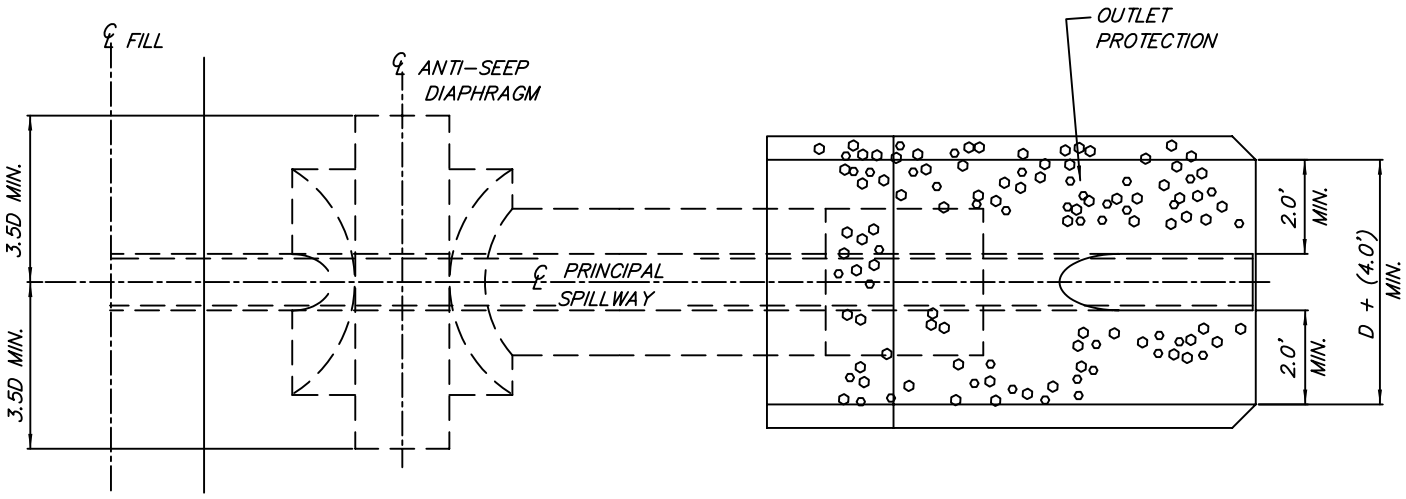

PLAN VIEW

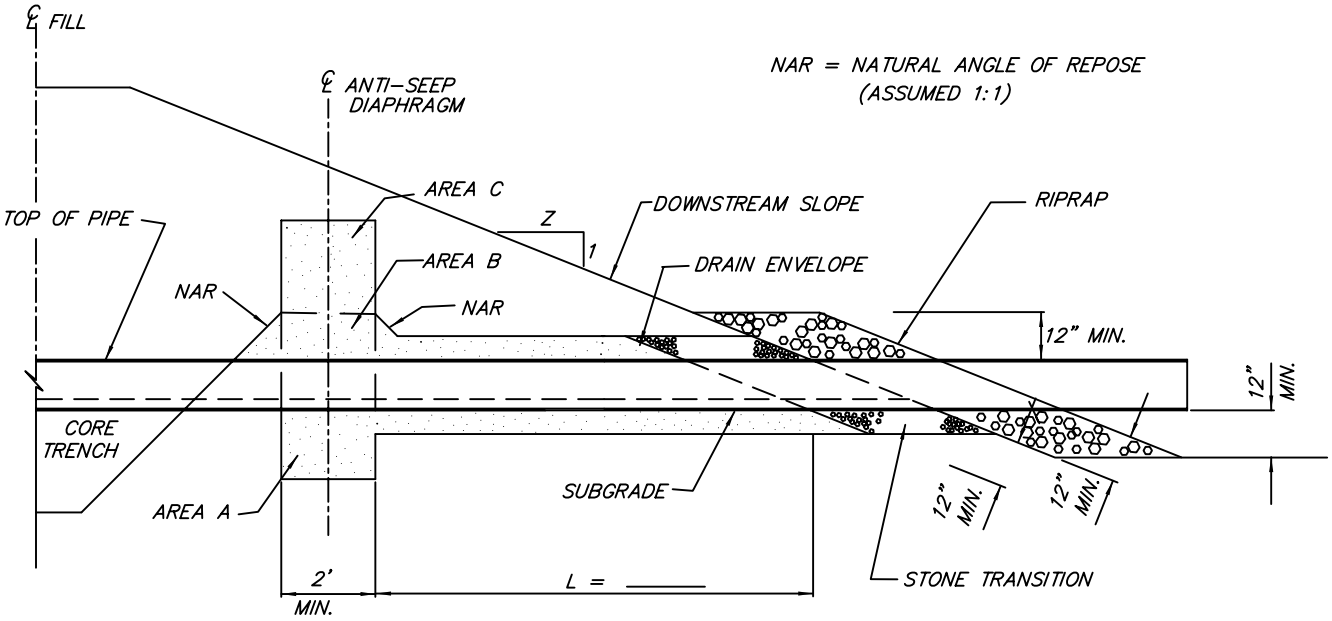

SECTION ON CENTERLINE OF PRINCIPAL SPILLWAY

QUANTITIES

DRAIN FILL:

DIAPHRAGM –	_____ CU. FT.	
ENVELOPE – E X L –	_____ CU. FT.	
TOTAL =	_____ CU. FT./27 =	_____ CU. YDS.
X DENSITY	_____ pcf/2000 =	_____ TONS
STONE TRANSITION–E X M–	_____ CU. FT./27=	_____ CU. YDS.
X DENSITY	_____ pcf/2000 =	_____ TONS
RIPRAP–(D+4)(D+2) X M –	_____ CU. FT./27 =	_____ CU. YDS.
X DENSITY	_____ pcf/2000 =	_____ TONS

REFERENCE :
STANDARDS AND SPECIFICATIONS 378

8/89
NOT TO SCALE

COOPERATOR _____
_____ COUNTY SWCD, INDIANA
LOCATION _____

DETAILS OF ANTI-SEEP DIAPHRAGM
SHEET 1 OF 2

U. S. DEPARTMENT OF AGRICULTURE
NATURAL RESOURCES CONSERVATION SERVICE

Designed		Approved By	
Drawn		Title	
Traced		Title	
Checked		Sheet No of	Drawing No.

IN–ENG–51

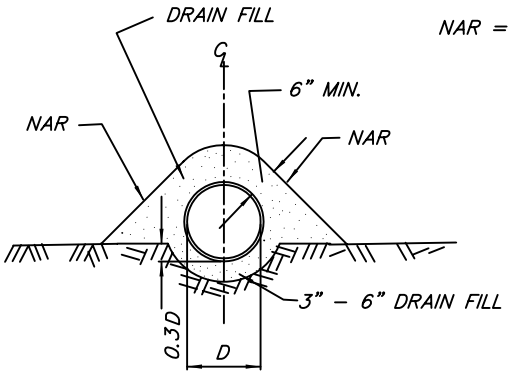

TYPICAL PIPE DRAIN ENVELOPE DOWNSTREAM OF ANTI–SEEP DIAPHRAGM

NAR = NATURAL ANGLE OF REPOSE (ASSUMED 1:1)

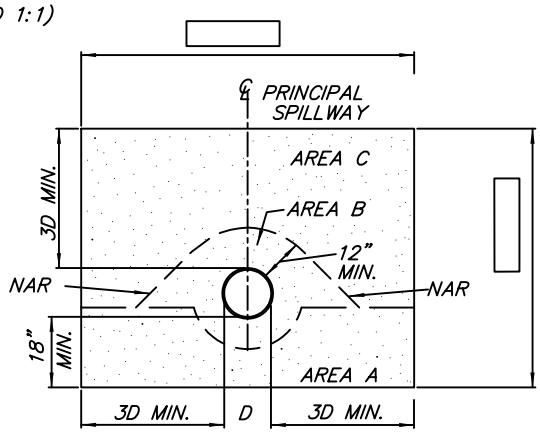

SECTION ON ℄ ANTI–SEEP DIAPHRAGM

INSTALLATION OF ANTI–SEEP DIAPHRAGM

1– PLACE DRAIN FILL IN AREA A BELOW PIPE SUBGRADE AND FOR BEDDING PIPE DOWNSTREAM.

2– PLACE PIPE.

3– PLACE DRAIN FILL IN AREA B AND IN DRAIN ENVELOPE OVER PIPE.

4– PLACE COMPACTED EARTH FILL OVER AREA A, AREA B AND DRAIN ENVELOPE.

5– EXCAVATE TRENCH TO CONTACT CLEAN DRAIN FILL IN AREA A AND AREA B THEN PLACE AREA C.

NOTES:

1– AREA A AND C MAY BE DONE IN LIFTS, THICKNESS AT CONTRACTOR'S OPTION.

2– THE DRAIN FILL SHALL CONSIST OF SAND MEETING FINE CONCRETE AGGREGATE REQUIREMENTS (AT LEAST 15% PASSING THE #40 SIEVE BUT NO MORE THAN 10% PASSING THE #100 SIEVE. INDIANA STATE HIGHWAY NO. 15 FINE AGGREGATE CAN BE USED).

3– STONE TRANSITION SHALL CONSIST OF INDIANA STATE HIGHWAY NO. 5 COARSE AGGREGATE OR EQUIVALENT.

4– AT LEAST 15% OF THE RIPRAP SHALL BE SMALLER THAN 3".

DRAIN FILL QUANTITIES		
	MIN. DRAIN FILL – CU. FT.	
PIPE DIAM. "D"	DIAPHRAGM	ENVELOPE PER LIN. FT. OF "L" "E"
6"	25	1.45
8"	40	1.72
10"	56	2.06
12"	77	2.40
15"	114	2.94
18"	158	3.50
24"	266	4.70
30"	403	6.00
36"	567	7.40
42"	760	8.90
48"	980	10.50

MUTIPLIER FOR STONE TRANSITION AND RIPRAP	
FILL SLOPE "Z"	$(Z^2+1)^{0.5}$
	"M"
2.0	2.24
2.5	2.69
3.0	3.16

DRAIN FILL	
IDOH #15 FINE	
SIEVE SIZE	PERCENT PASSING
NO. 6	100
NO. 8	95–100
NO. 30	50–75
NO. 50	15–40
NO. 100	0–10
NO. 200	0–3

STONE TRANSITION	
IDOH #5 COARSE	
SIEVE SIZE	PERCENT PASSING
1 1/2	100
1"	85–98
3/4"	60–85
1/2"	30–60
3/8"	15–45
NO. 4	0–15
NO. 8	0–10

8/89

NOT TO SCALE

COOPERATOR _____

_____ COUNTY SWCD, INDIANA

LOCATION _____

DETAILS OF ANTI–SEEP DIAPHRAGM
SHEET 2 OF 2

U. S. DEPARTMENT OF AGRICULTURE
NATURAL RESOURCES CONSERVATION SERVICE

Designed _____ Approved By _____
Drawn _____ Title _____
Traced _____ Title _____
Checked _____ Sheet No of Drawing No.

IN–ENG–51