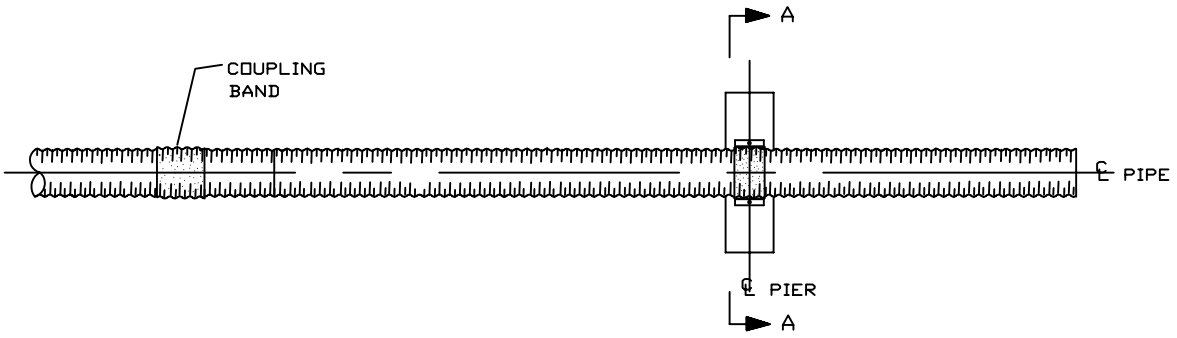

PLAN

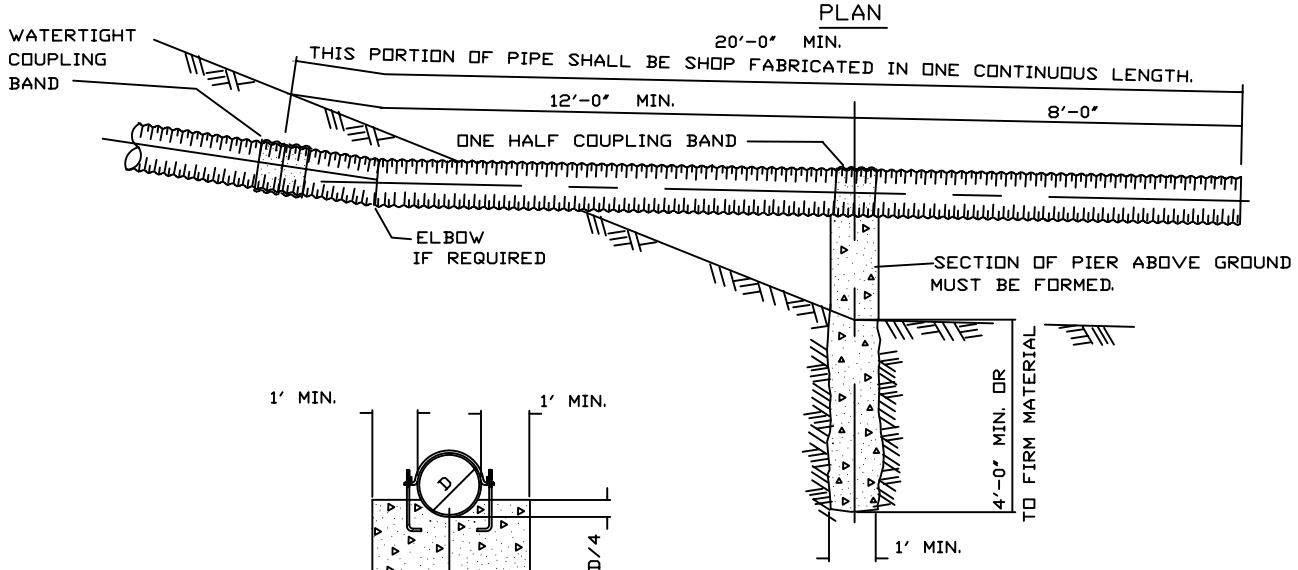

SECTION ON CENTERLINE

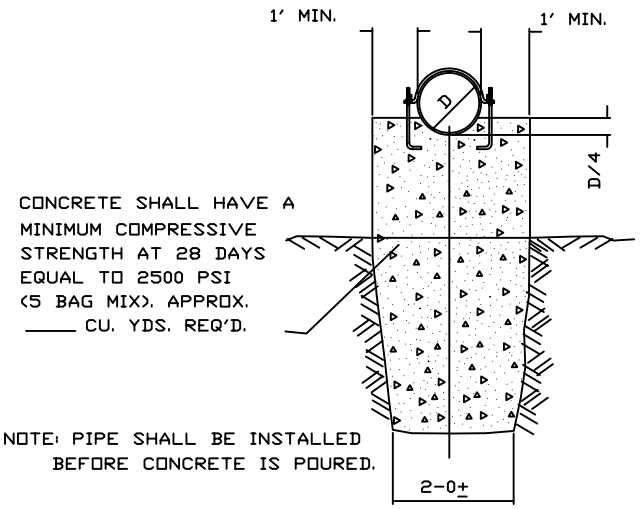

SECTION A-A

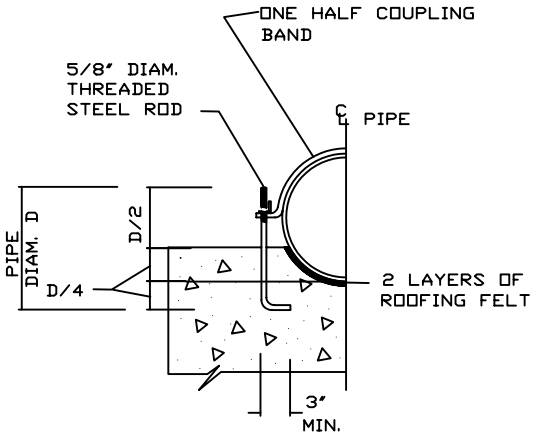

ANCHOR BOLT DETAIL

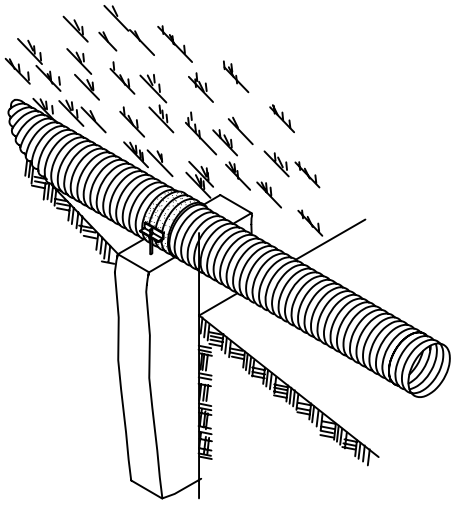

ISOMETRIC VIEW

NOT TO SCALE

REVISED 8-89

COOPERATOR _____

_____ COUNTY SWCD, INDIANA

LOCATION _____

CONCRETE PIER FOR CORRUGATED METAL PIPE CANTILEVERED OUTLET

U. S. DEPARTMENT OF AGRICULTURE
NATURAL RESOURCES CONSERVATION SERVICE

Designed	Approved By	
Drawn	Title	
Traced	Sheet No of	Drawing No.
Checked		

IN-ENG-52