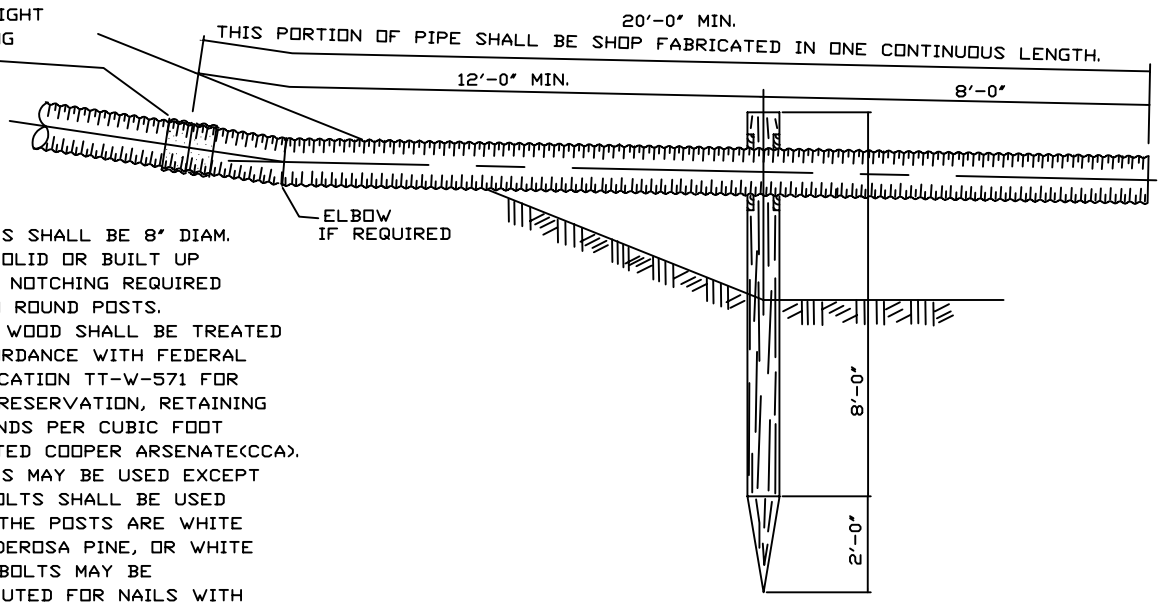

SECTION ON ℄ OF PIPE

NOTES:
1- POSTS SHALL BE 8" DIAM. OR 6" SOLID OR BUILT UP SQUARE. NOTCHING REQUIRED ONLY IN ROUND POSTS.
2- ALL WOOD SHALL BE TREATED IN ACCORDANCE WITH FEDERAL SPECIFICATION TT-W-571 FOR WOOD PRESERVATION, RETAINING 0.6 POUNDS PER CUBIC FOOT CHROMATED COOPER ARSENATE(CCA).
3- NAILS MAY BE USED EXCEPT THAT BOLTS SHALL BE USED WHERE THE POSTS ARE WHITE OR PONDEROSA PINE, OR WHITE CEDAR. BOLTS MAY BE SUBSTITUTED FOR NAILS WITH ANY KIND OF POSTS.
4- BOLTS SHALL BE NO. 2 MACHINE GRADE. 3/8" DIAMETER BY 10 INCHES LONG. NUTS, BOLTS, AND WASHERS SHALL BE GALVANIZED IN ACCORDANCE WITH ASTM A307 AND ASTM A153.
5- NAILS SHALL BE RING OR BARBED SHANK, 6" LONG.

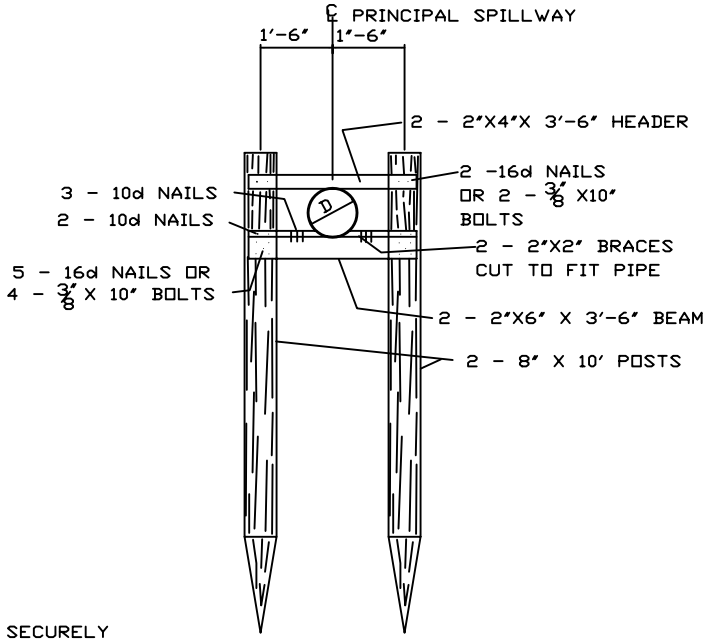

ELEVATION OF PIER

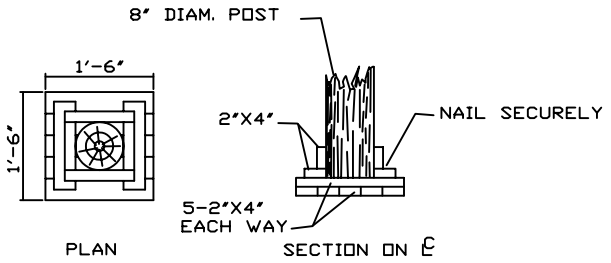

ALTERNATE BASE
FOR EXCAVATED FOOTINGS ONLY - TO FIRM GROUND BELOW FROST LINE

BILL OF MATERIALS FOR TIMBER SUPPORT PIER OUTLET

ITEM	REQ'D	SIZE	LENGTH	TOTAL LENGTH
POST	2	8" DIAM.	10'-0"	20'-0"
HEADER	2	2"X4"	3'-6"	7'-0"
BRACES	2	2"X2"	3'-6"	7'-0"
BEAM	2	2"X6"	3'-6"	7'-0"
BOLTS AND/OR NAILS AS REQUIRED				

BASED ON DRAWING 3-L-12523 FOR 15" OR SMALLER DIAMETER PIPES ONLY

COOPERATOR _____
_____ COUNTY SWCD, INDIANA
LOCATION _____

TIMBER SUPPORT PIER
OUTLET FOR " DIAM PIPE

U. S. DEPARTMENT OF AGRICULTURE
NATURAL RESOURCES CONSERVATION SERVICE

Designed ____ Drawn ____ Traced ____ Checked ____
Approved By ____ Title ____ Title ____
Sheet No of
Drawing No.

IN-ENG-53-A

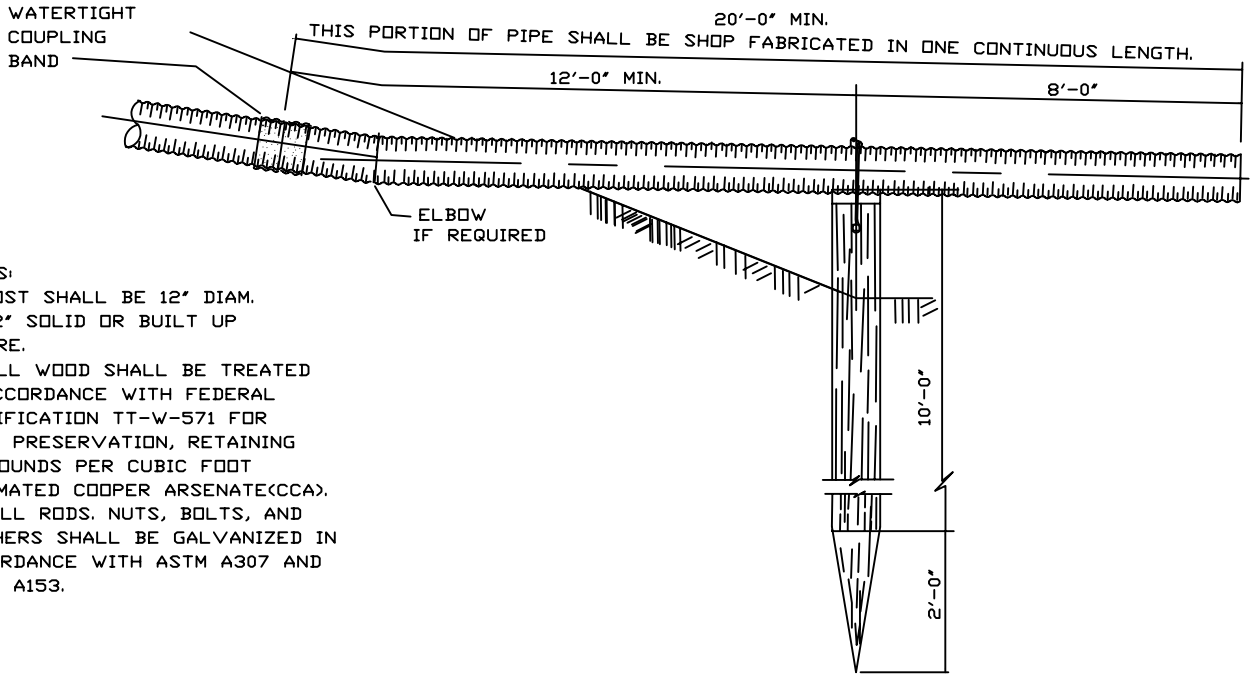

NOTES:
1- POST SHALL BE 12" DIAM. OR 12" SOLID OR BUILT UP SQUARE.
2- ALL WOOD SHALL BE TREATED IN ACCORDANCE WITH FEDERAL SPECIFICATION TT-W-571 FOR WOOD PRESERVATION, RETAINING 0.6 POUNDS PER CUBIC FOOT CHROMATED COOPER ARSENATE(CCA).
3- ALL RODS, NUTS, BOLTS, AND WASHERS SHALL BE GALVANIZED IN ACCORDANCE WITH ASTM A307 AND ASTM A153.

SIDE ELEVATION

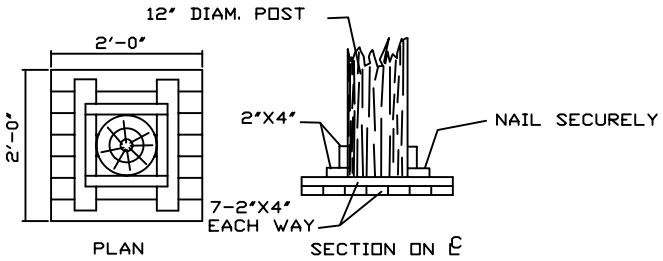

ALTERNATE BASE
FOR EXCAVATED FOOTINGS ONLY - TO FIRM GROUND BELOW FROST LINE

3/4" DIAM. 18" LONG, STEEL ROD, THREAD 3" EACH END, 3"X3"X1/4" WASHERS AND NUTS (SEE NOTE 4 BELOW)

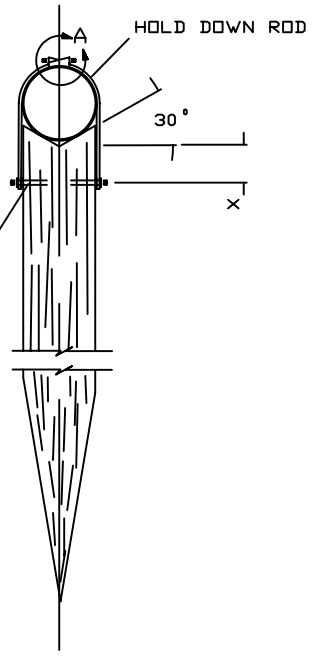

END ELEVATION

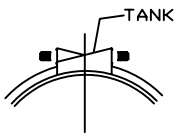

DETAIL A

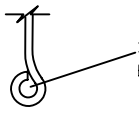

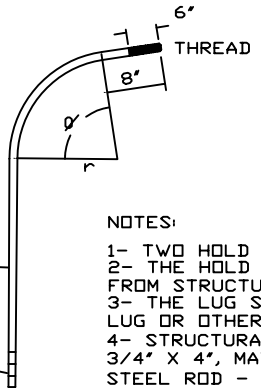

NOTES:
1- TWO HOLD DOWN RODS ARE REQUIRED.
2- THE HOLD DOWN RODS SHALL BE MADE FROM STRUCTURAL QUALITY STEEL.
3- THE LUG SHALL BE A STANDARD TANK LUG OR OTHER COMMERCIAL TYPE.
4- STRUCTURAL QUALITY STEEL LAG SCREWS, 3/4" X 4", MAY BE USED IN LIEU OF 18" STEEL ROD - 2 REQUIRED.

HOLD DOWN ROD FOR PIPE

COOPERATOR _____
_____ COUNTY SWCD, INDIANA
LOCATION _____

TIMBER SUPPORT PROP
OUTLET FOR " DIAM PIPE

U. S. DEPARTMENT OF AGRICULTURE
NATURAL RESOURCES CONSERVATION SERVICE

DIMENSIONS

DIAM. PIPE IN.	ROD LENGTH IN.	X IN.	r IN.	α
6	32	14	6	70°
8	32	11	6	70°
10	32	9	6	70°
12	32	6	6	70°
15	39	9	7 1/2	90°

BASED ON DRAWING 5-E-13850.215 FOR 15" OR SMALLER DIAMETER PIPES ONLY

Designed ____ Approved By ____
Drawn ____ Title ____
Traced ____ Title ____
Checked ____ Sheet No of ____ Drawing No. ____

IN-ENG-53-B